STACK IN A BOX

MODEL A-D3

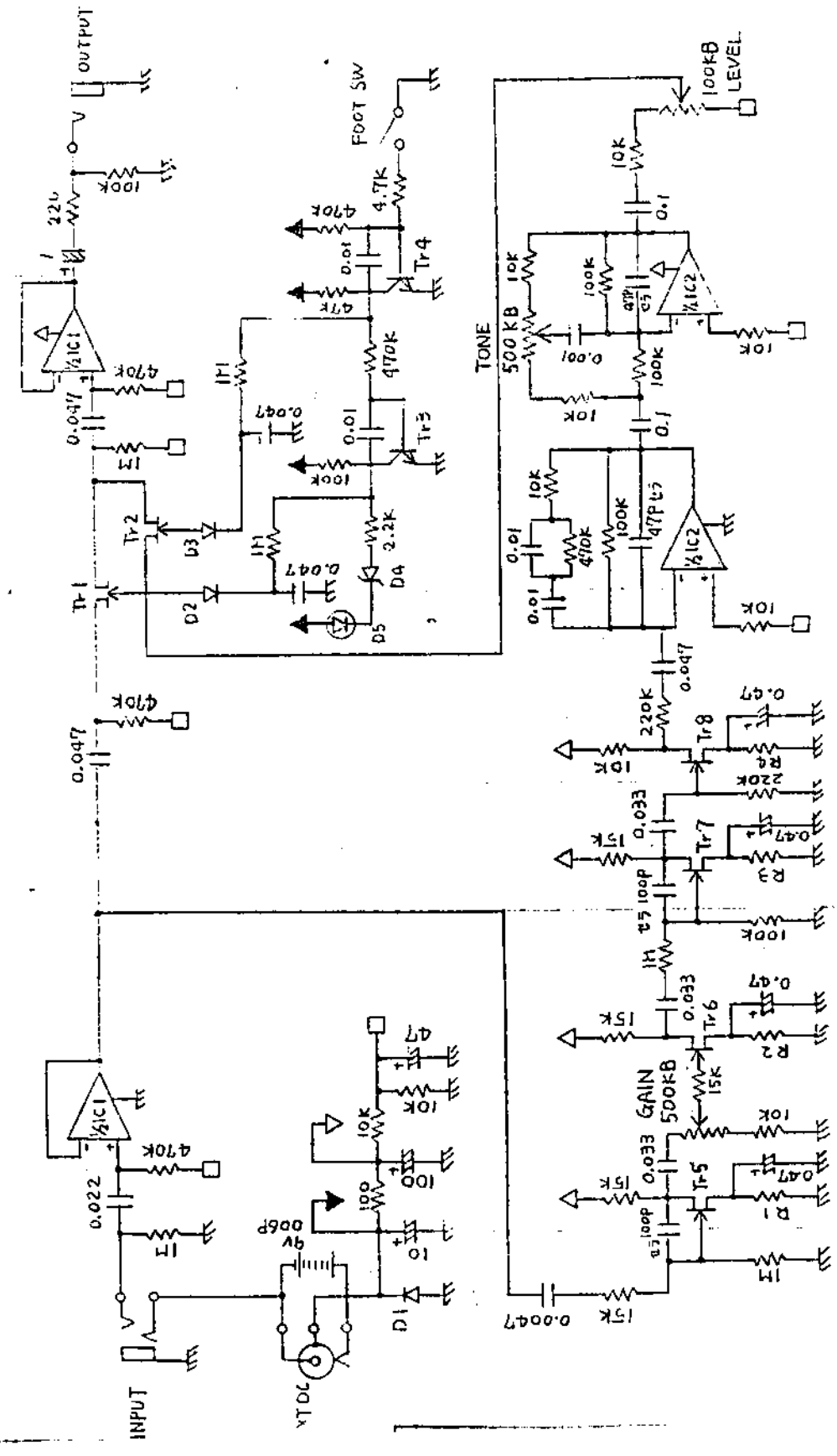

IC1,2 : 4558
Tr-1,2 : 2SK30AY
Tr3,4 : 2SC1815GR/BL
Tr5~8 :
R1~4 :

D1 : 10D-1
D2,3 : 1S1588
D4 : 05Z5.1
D5 : LED

A-D3

2N5245
2SK30

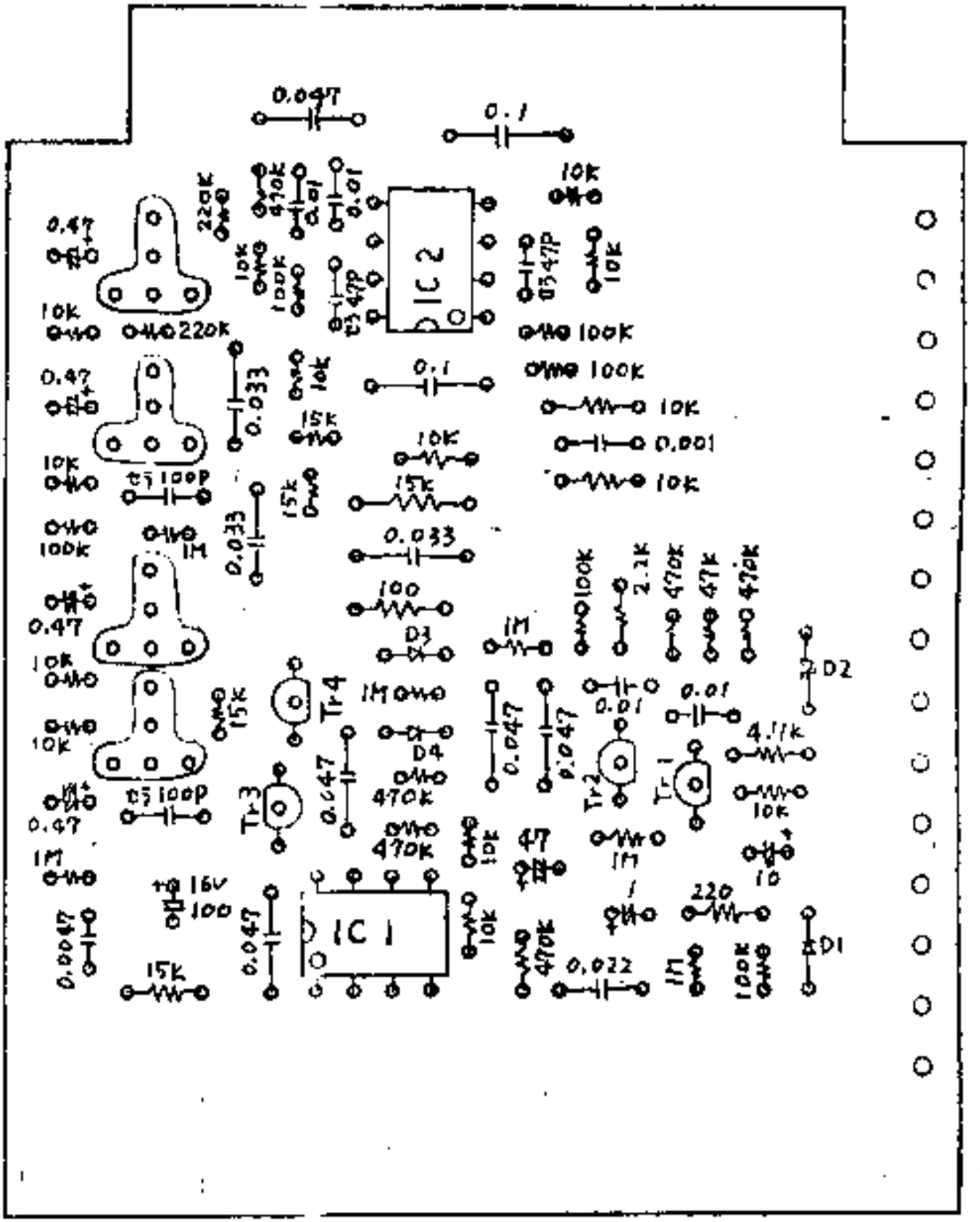
0.047
0.1
10K
220K
470K
0.01
0.01
IC 2
0.47
10K
100K
0.47P
10K
10K
220K
100K
0.47
0.033
10K
0.1
100K
15K
10K
0.001
10K
10K
0.47P
100P
15K
15K
100K
1M
0.033
0.033
100
0.47
D3
1M
100K
2.2K
470K
47K
470K
D2
10K
15K
Tr4
1M
0.01
0.01
4.11K
D4
0.047
0.047
0.47P
100P
Tr3
0.047
470K
Tr2
Tr1
10K
0.47
470K
10K
47
1M
10
1M
+9 16V
100
IC 1
10K
220
0.0047
0.047
15K
470K
0.022
1M
100K
D1